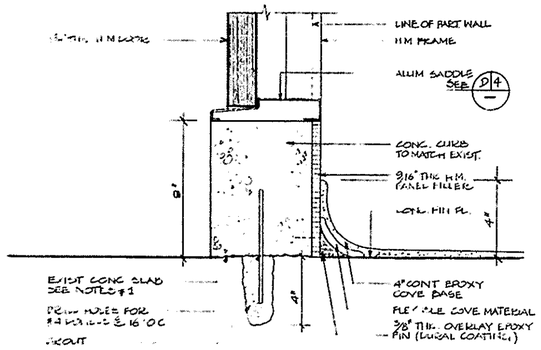

D/1 CONC. CURB DETAIL AT DOOR (TYP.)

SCALE IN INCHES 0 4 8

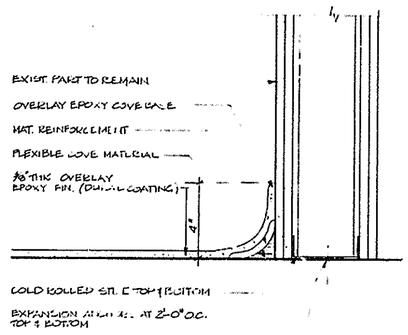

D/2 COVE BASE DETAIL (TYP.)

SCALE IN INCHES 0 4 8

NOTES:

1. CLEAN AND ROUGHEN EXISTING CONCRETE SLAB AND APPLY COAT OF EPOXY BONDING CEMENT UNDER ALL THE NEW CONCRETE CURBS
2. FOR ALL FIREPROOFING REQUIREMENT SEE NOTES ON DWG. A-2.

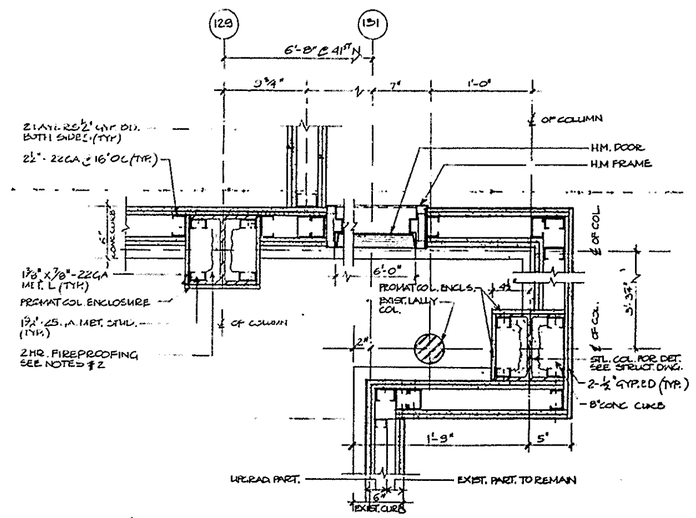

P/1 ENLARGED PART PLAN AT 41N FLOOR ONLY

SCALE IN FEET 0 1 2

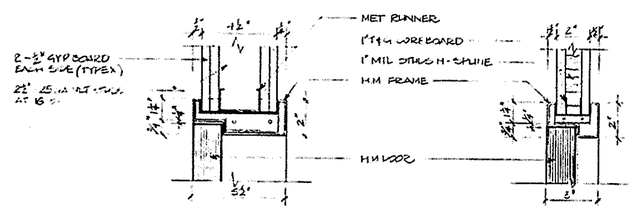

H/1 H/2

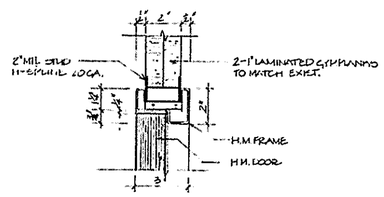

H/3

D/3 DOOR HEAD TYPES

SCALE IN FEET 0 1/2 1

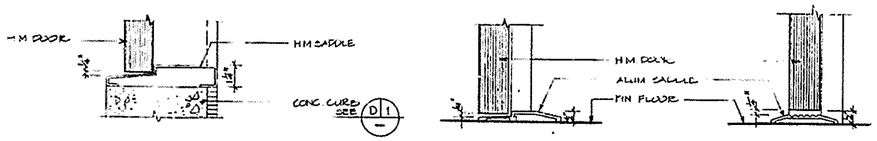

T/1 T/2 T/3

D/4 TRESHOLD TYPES

SCALE IN FEET 0 1/2 1

I HEREBY CERTIFY THAT THIS IS A TRUE AND CORRECT COPY OF ONE OF THE CONTRACT DRAWINGS CONSTITUTING A PART OF CONTRACT NO. WTC-802.071 IN THE FORM IN WHICH SAID DRAWINGS EXISTED AT THE TIME THE SAID CONTRACT WAS EXECUTED BY THE PARTIES.

DATE 6/21/95 Soulman A. Aslam
SPEC WRITER

DATE 8/15/95 Peter K. Swenson
ENGINEER OF DESIGN

Sheet 42 of 224

THE PORT AUTHORITY OF NY & NJ

Peter K. Swenson
ENGINEERING PROGRAM MANAGER
WORLD TRADE CENTER

CHIEF ARCHITECT

Engineering Department
Design Division

~~The World Trade Center~~

~~Electrical/HVAC Upgrade Program~~

Title
TOWERS ONE AND TWO
LOW VOLTAGE SUBSTATIONS CONSTRUCTION AND INSTALLATION

ARCHITECTURAL
MISCELLANEOUS DETAILS

No.	Date	Revision	Approved

This drawing subject to conditions in contract. All inventions, ideas, designs and methods herein are reserved to Port Authority and may not be used without its written consent.

A.T.SOLAWA	A.T.S.	L.V.GALAN
Designed by	Drawn by	Task Leader

Principal Architect

Date 5/1/95 Scale AS NOTED

Contract Number WTC-802.071 Drawing Number A-37